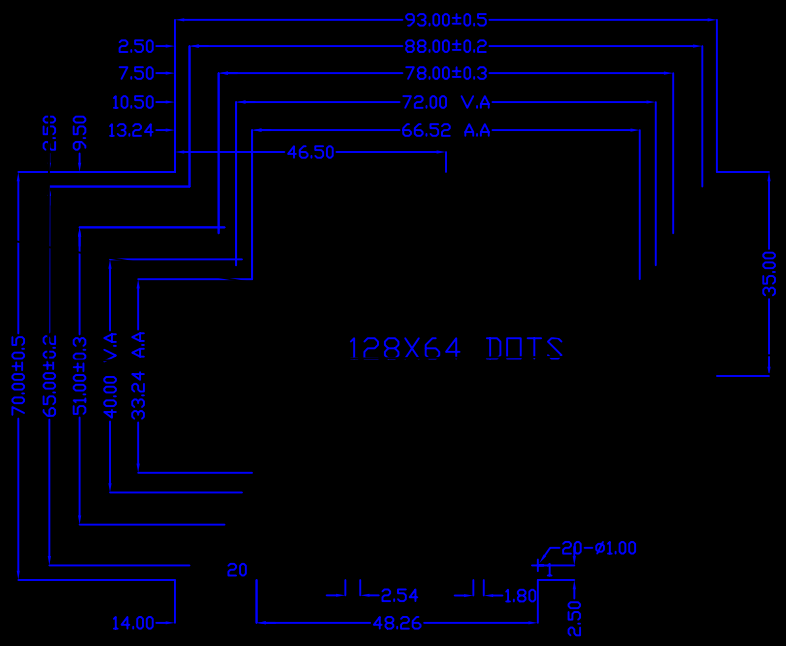

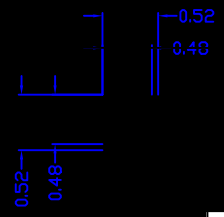

	EQUIVALENT
	AILABLE
	0)
	GH CONTRAST

	UNIT
H × 14.0T	MM
40.0H	MM
64	DOTS
48W × 0.48H	MM
0.52W × 0.52H	MM

	OF IC1(HIGH EFFECTI
	SIGNAL(LOW EFFECTIVE)
	EGATIVE VOLTAGE INPUT/OUTPU
	LED BACKLIGHT POWER SUPPLY(+)
	LED BACKLIGHT POWER SUPPLY(-)

JXD12864A 128 X 64 DOTS GRA ERT IN LCD